Caddy Assembly Instructions

Assemble the Caddy first, according to these diagrams:

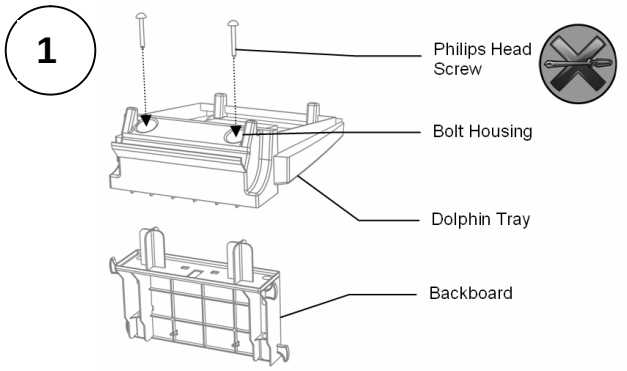

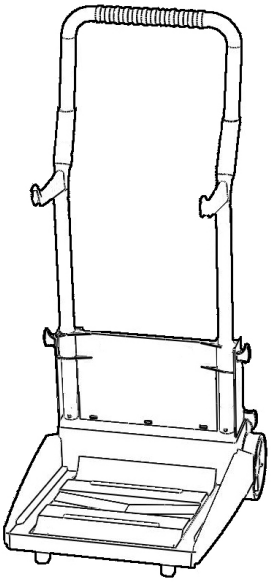

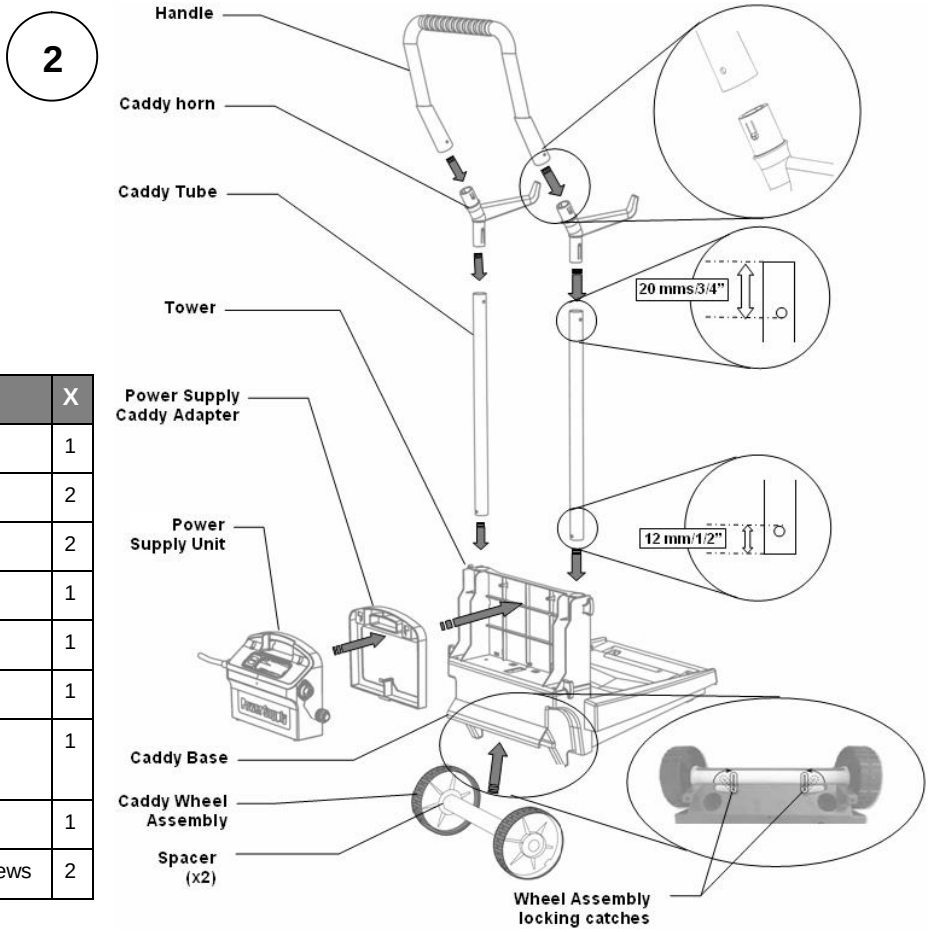

Part Name	X
Handle	1
Caddy Horn	2
Caddy Tube	2
Tower	1
Caddy Base	1
Wheel assembly	1
Power Supply Unit adapter	1
Power Supply Unit	1
Tower securing screws	2